ALPHA

3478UFP125P62

EAN 4031582327649

BETTER MOBILITY. BETTER LIFE.

Fixed castor, Fork made of pressed steel, bright zinc plated, blue passivated, wheel axle with nut, plate fitting.
Wheel centre made of Polyamide, Tread: elastic-tyre, non-marking, precision ball bearing

Picture may differ from original product

Technical Data

Wheel diameter	125 mm
Wheel width	40 mm
Castor width	85 mm
Size of Plate	103 x 85 mm
Plate hole centres	80/77 x 60 mm
Plate hole	9 mm
Overall height	155 mm
Temperature	- 20 / + 80 °C
Standard	EN 12532
Weight	0.831 kg
Hardness of tread	Shore A 63
Load capacity	250 kg
Load capacity (static)	500 kg

Dimensions

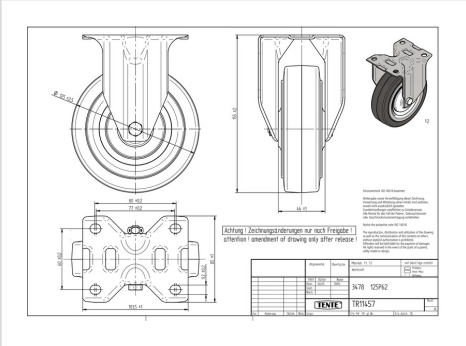

Advantages at a glance

Roll performance	●●●○○
Movement noise	●●●●●
Attrition	●●●○○
Corrosion resistance	●●●○○

© Copyright 2022 TENTE International **www.tente.com** 28/09/2022